Diritti riservati All rights reserved

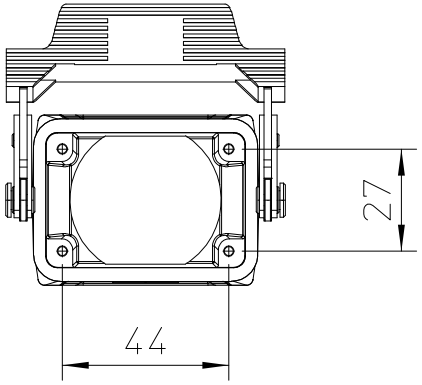

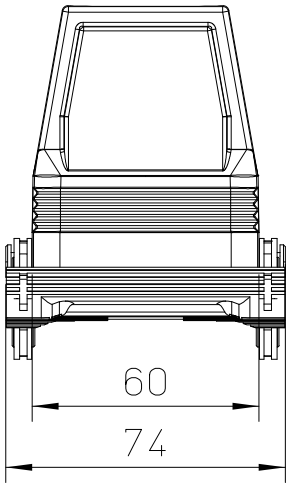

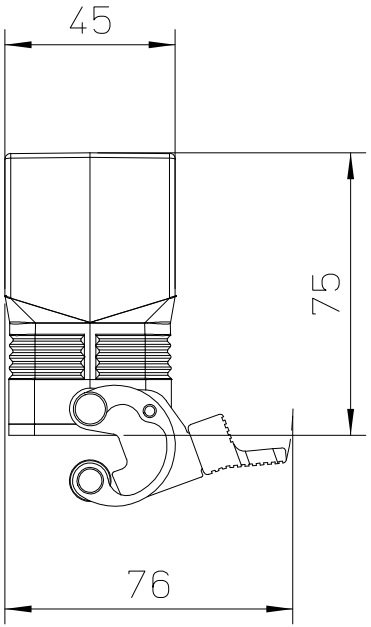

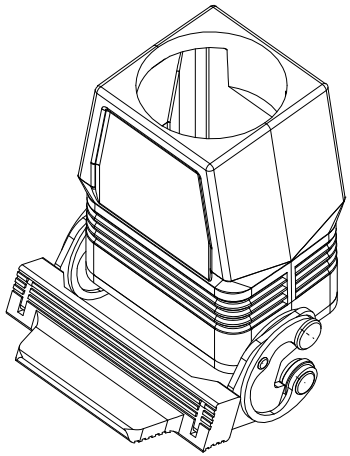

dimensions in mm	MFV 06 LG40	Scale	
Date 11/11/16	Hood with M40 entry	1:2	ILME
Sign. C. Mainini			